English

AT-1

CNC 1 SPINDLE 1 TURRET PRECISION LATHE

TAKAMAZ

How Should We View this Once in a Century Transformation?



The automotive industry, led by two major powers, is continuing to evolve in the direction of electrification (EVs), autonomous driving, connected technology (CASE) and the sharing economy (MaaS).
These technological innovations are ushering in changes in our approach to environmental issues, to safety improvements, and toward new transportation services.
The evolutionary changes are supported by machine tools capable of machining high-quality parts.
No exception to the trend, part machining on machine tools must contend with increasingly fierce international competition, labor shortages, and diversifying customer needs.
Introducing machine tools that are able to machine parts with consistent quality will lead to sustainable growth.

Instantly boost production capacity with further advanced cards!

AT-1

6inch/8inch Chuck

- Number of turret stations
- Spindle indexing (Electrical) (Order parts separately)
- Environmentally friendly design

You can select the chuck size without changing the chucking cylinder or sleeve. (Order parts separately)

6 inch



- Collet TSC-D26



- Power chuck HF3-6A、BR06

8 inch



- Collet TSC-D43



- Power chuck HF3-8B、BR08



Pursuing Shorter Cycle Times

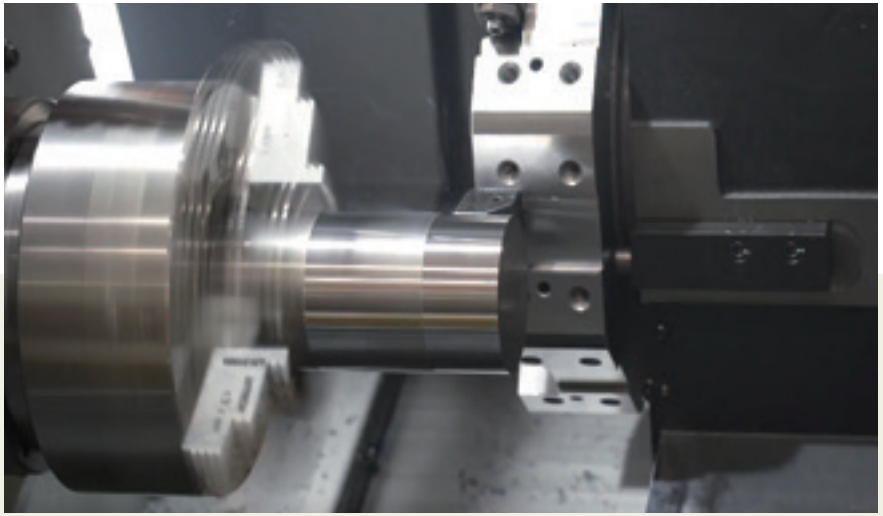

Cycle times shortened by speed increases

The class-topping X-axis feedrate of 24 m/min is substantially higher compared to existing models and helps to achieve productivity improvements.

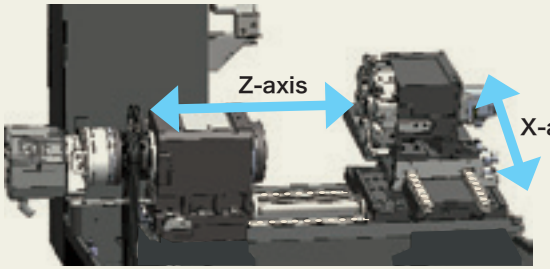

X-axis rapid traverse speed: 24 m/min
Z-axis rapid traverse speed: 24 m/min

33%up
※Comparison with GSL-15PLUS (X axis)

Expanded spindle speed range

The maximum spindle speed has been extended up to 4,500 min^{-1} to cover a wide range of needs, from heavy-duty cutting at low speeds to light-duty cutting at high speeds.

Max. spindle speed
4,500 min^{-1}
Allows a full range of machining layouts

+1,000min^{-1}
※Comparison with GSL-15PLUS

Reduced non-cutting time

Cycle times have been shortened by reducing the spindle acceleration and deceleration times.

Spindle Acceleration and Deceleration Times

※At 3,500 min^{-1} (values achieved by GSL-15PLUS)

Acceleration 3.1s (4.0s)
23%reduction
※Comparison with GSL-15PLUS

Deceleration 2.9s (3.8s)
24%reduction
※Comparison with GSL-15PLUS

Improved Energy Efficiency through Spindle Speed Optimization

Power Consumption per Workpiece

The increase in idle power consumption caused by the higher controller power is outweighed by the reduction in power consumption achieved by increasing the spindle speed (changing the speed ratio), resulting in net energy savings.

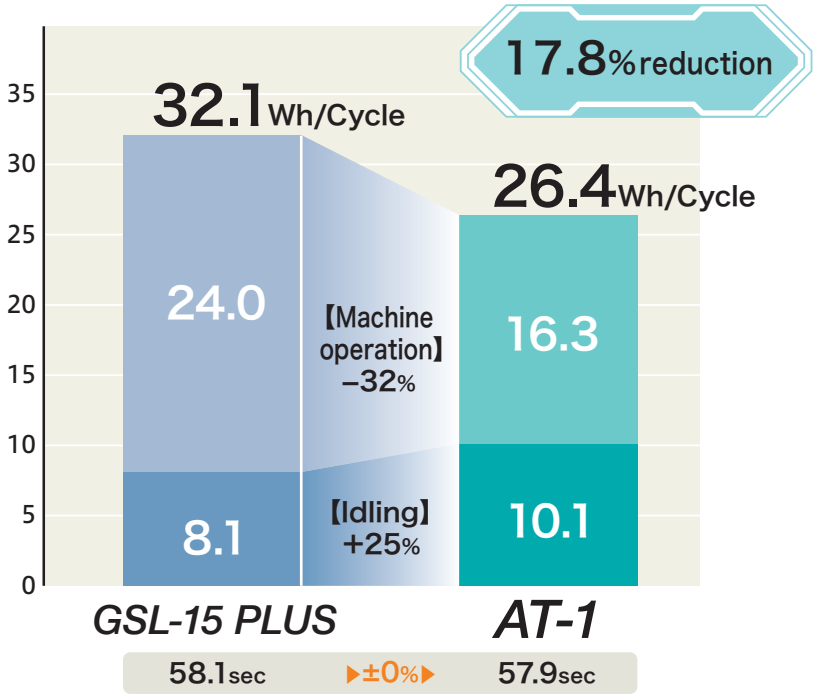

※Measured using TAKAMAZ's internal running program for measurement.
The reduction effect is in comparison with the GSL-15PLUS.
The reduction rate varies according to the machine specifications and operating conditions.

Comparison of Power Consumption, CO_2 Emissions, and Electricity Costs

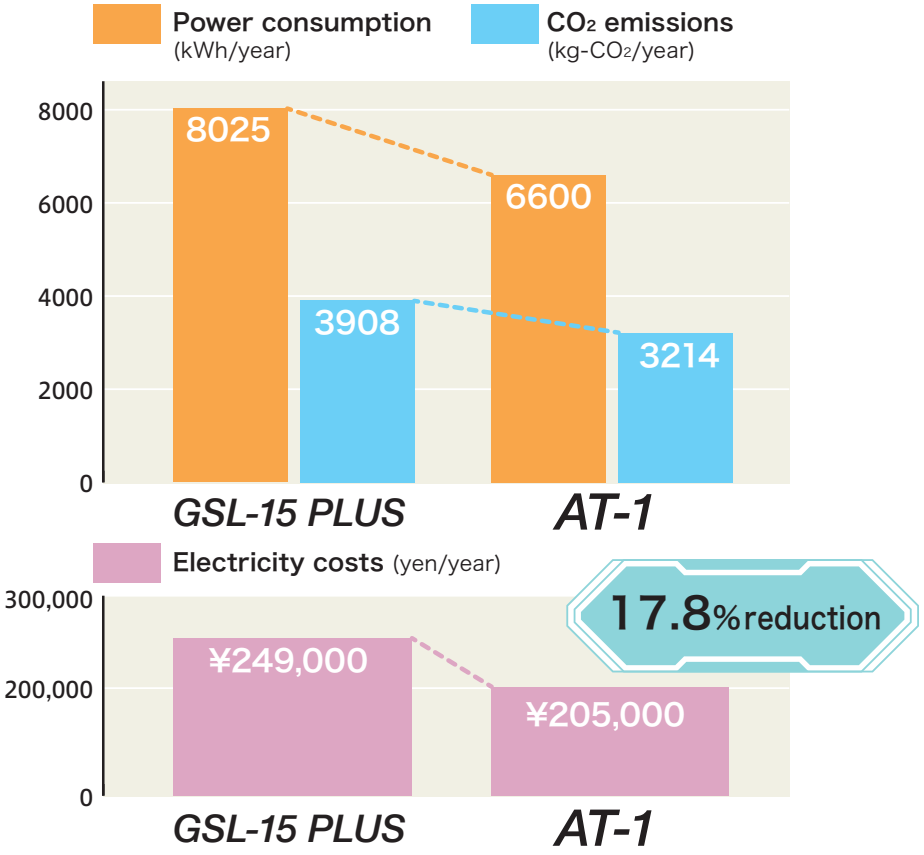

※Assuming 1,000 workpieces per day, 250 days and electricity costs of 31 yen/kWh
Calculated based on an electricity emission factor of 0.487 (kg-CO_2/kWh)
The reduction rate varies according to the operating conditions.

All-round Minimization of Labor and Costs

■ Low center of gravity construction reduces strain on the operator

The machine is designed with a low center of gravity construction to reduce the labor burden on the operator and ensure stable machining. We have also made the bed lighter while maintaining its rigidity, which contributes to resource conservation.

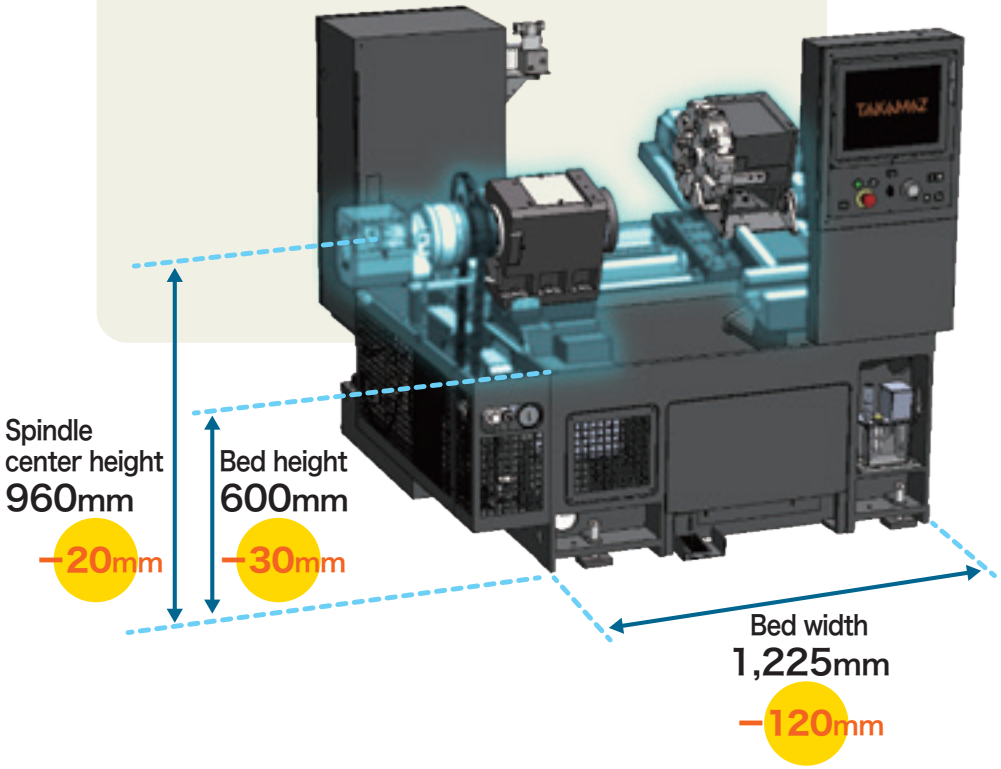

※Comparison with GSL-15PLUS

■ Running costs reduced with eco lubrication

A stable oil film on the rolling surfaces inside the machine is an essential requirement for consistent production over the long term. This machine optimizes the volume of lubricating oil to conserve resources.

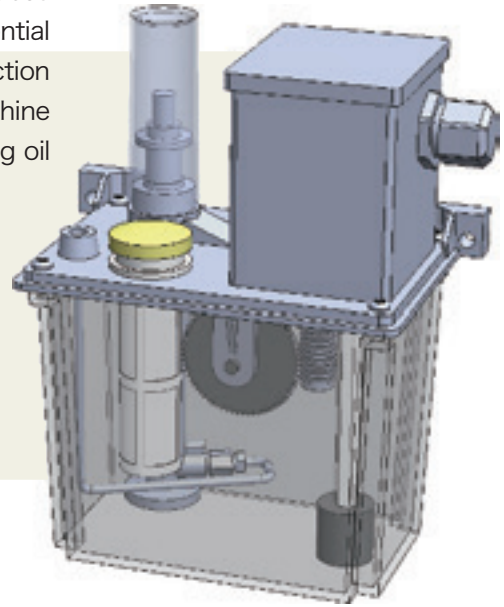

Optimization of lubricating oil discharge volumes

Running costs reduced,
conservation of resources

33%reduction
※Comparison with GSL-15PLUS

Discharge volume 2cc/30min

User Friendly Design Down to the Smallest Detail

■ Designed with attention to detail

The coolant circuit has been extended to prevent accumulation of chips and shorten the time spent cleaning the machine. In addition, the bed is constructed with flat sections eliminated and slopes provided to make it hard for chips to build up.

A chuck clamping confirmation device is equipped as standard to prevent accuracy errors and workpiece fly-out due to misclamping, so machining can be carried out safely. A hydraulic pressure switch is also equipped as standard to detect hydraulic unit faults, eliminating danger.

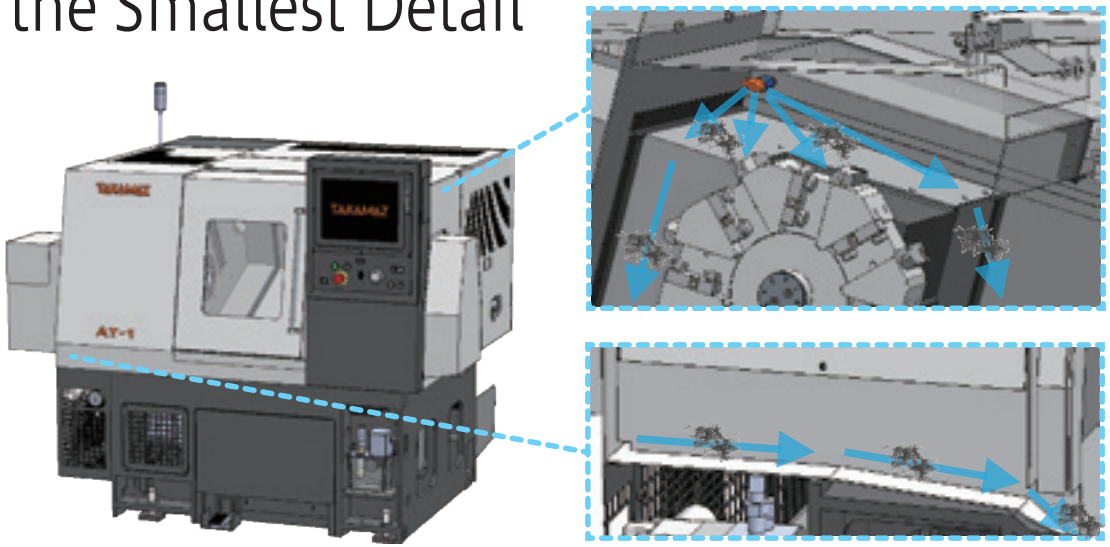

Coolant Circuit Extended Patent No. 7350799

■ Better operability and maintainability

With ease of maintenance and repair in mind, a wide access opening to the work area can be secured with minimal removal of maintenance covers.

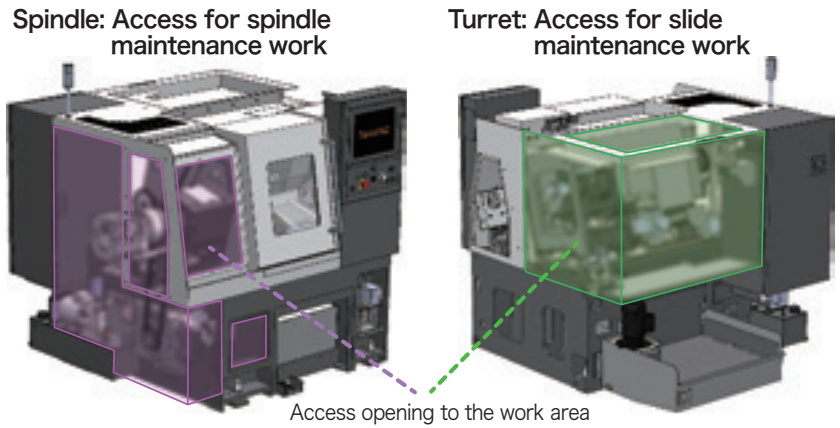

■ Separate-type coolant tank adopted

The tank has casters mounted on the front side, so it can be drawn out. This allows regular cleaning of the coolant tank with minimal effort.

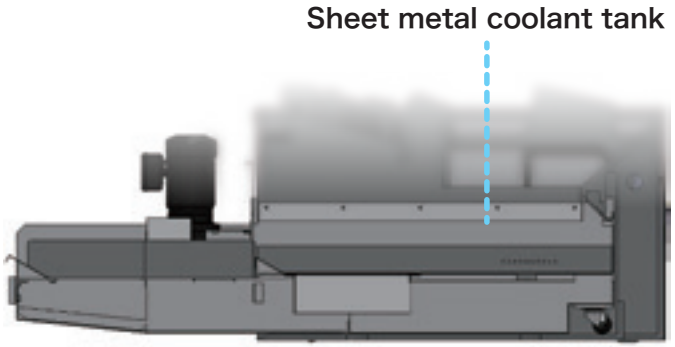

User Friendly Design Down to the Smallest Detail

Improved Safety Support

A door interlock function is provided to completely isolate the machining chamber, ensuring operator safety.

※This machine conforms to the JIS B 6031:2014 safety standards.

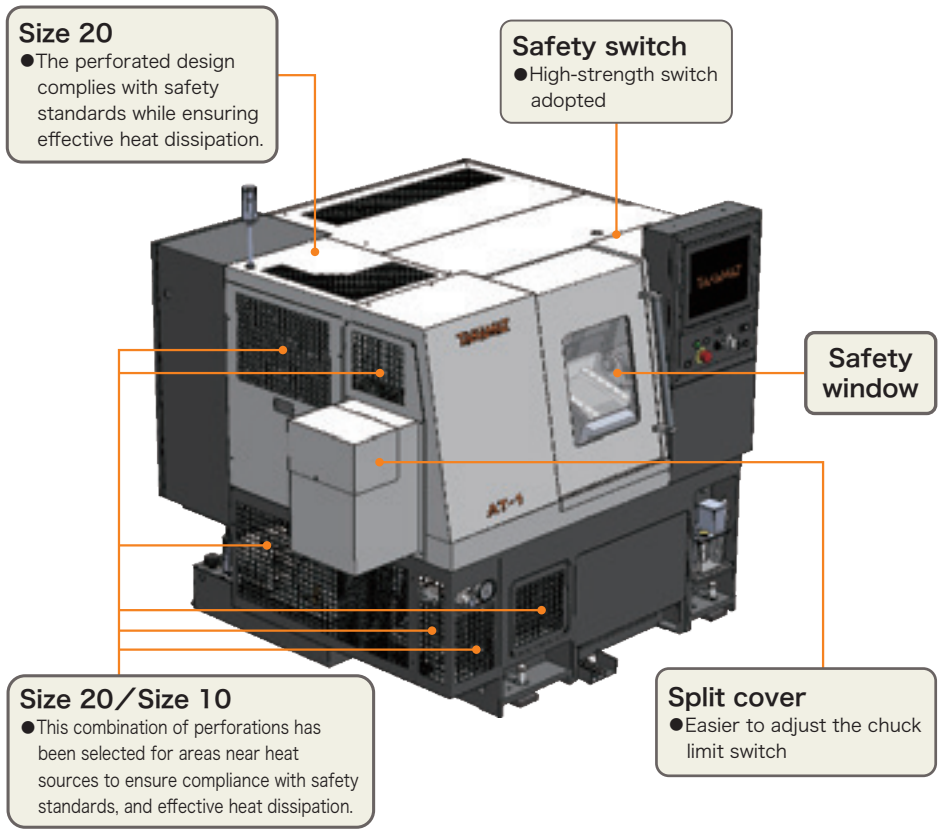

Wider Opening Improves Working Convenience

A wide door opening ensuring sufficient working space and a safety window that is resistant to scratching by chips and offers a high level of visibility are adopted as standard.



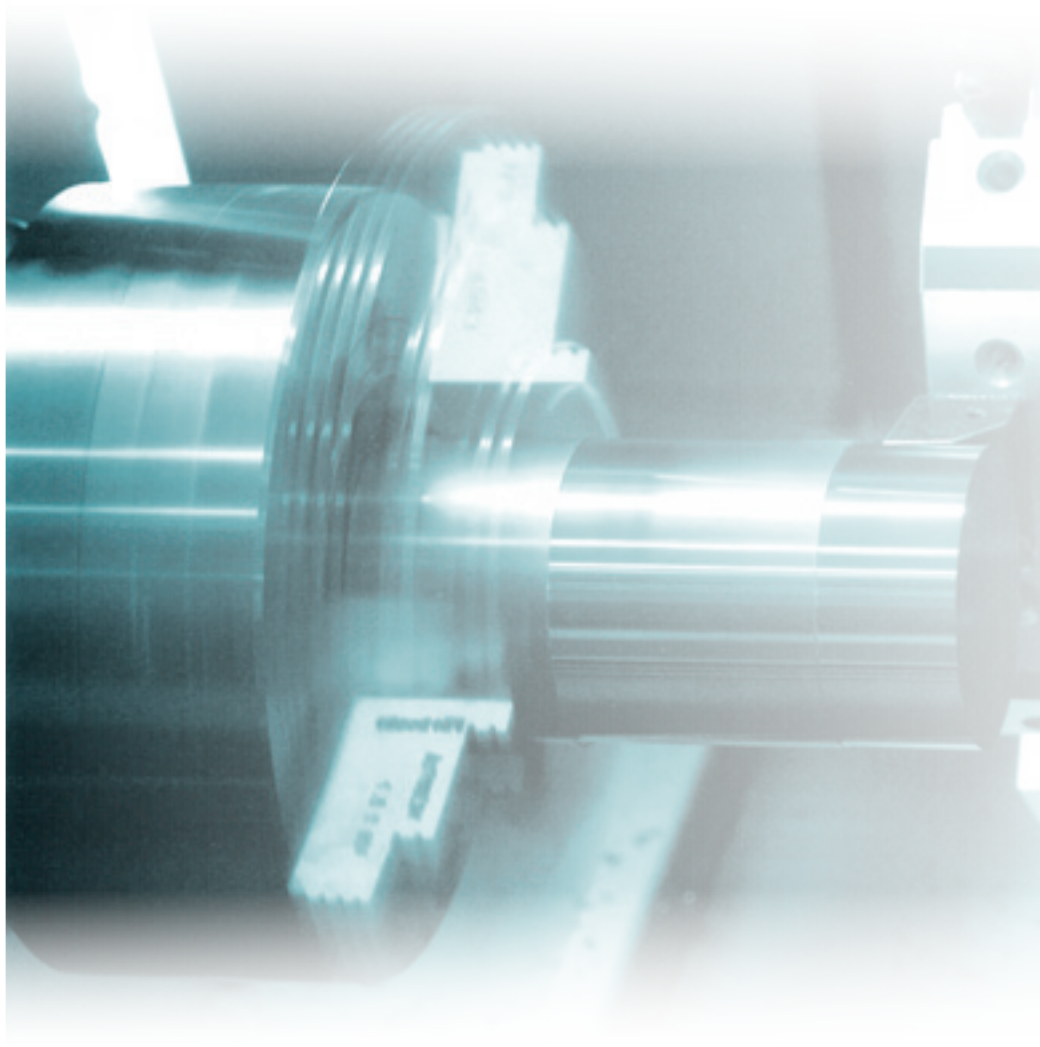

Capacity

Note that accuracy is not guaranteed.
Depending on cutting conditions.

			AT-1
O.D. heavy cutting (at continuous rating)	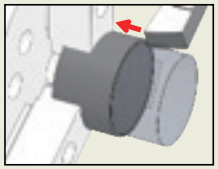	Cutting Cross Sectional Area(mm^2)	0.89
O.D. grooving	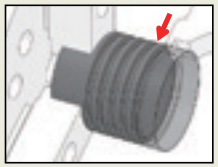	Groove width(mm)	5
		Distance from chuck jaw end(mm)	109
Drilling (at continuous rating)	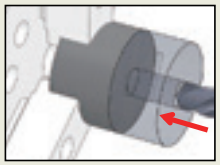	Drill diameter(mm)	ϕ25
		Feedrate(mm/rev)	f 0.22

※Workpiece : S45C

Better operability and maintainability

Detailed Information Display on the NC Screen

Alarm screen

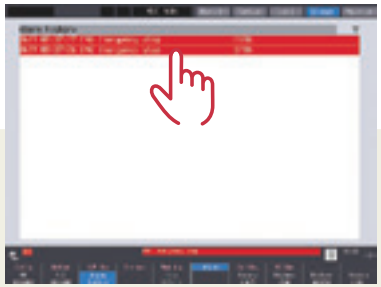

Parameter screen

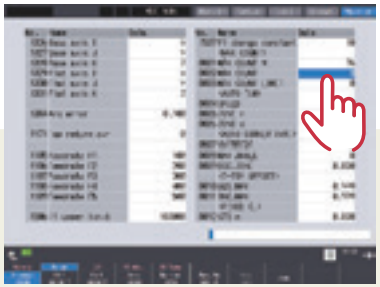

Help or Long tap



Helps to reduce down time

Revision History at a Glance

Setting change history function

Operation history display data

- Parameter
- Coordinate system offsets
- PLC switches
- Tool offsets
- Common variables, etc.

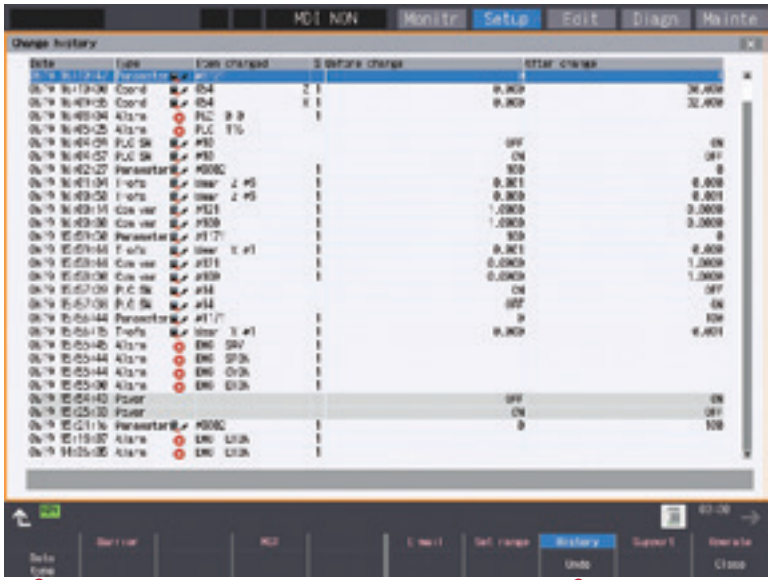

You can select whether to display or hide each type of data.

If you make a mistake you can reinstate the original setting.

Helps with implementing traceability

Better operability and maintainability

■ Maintenance-free, with no battery changes required

If the power remains off for an extended period, a machine tool's battery may run out, with potential loss of the home position data, but this machine is equipped with a backup function, so the data is automatically saved.



Work load reduction for operators / Reduction of waste

Increased screen size



8.4 inch

76% bigger
※Comparison with GSL-15PLUS



15 inch

Intuitive operation

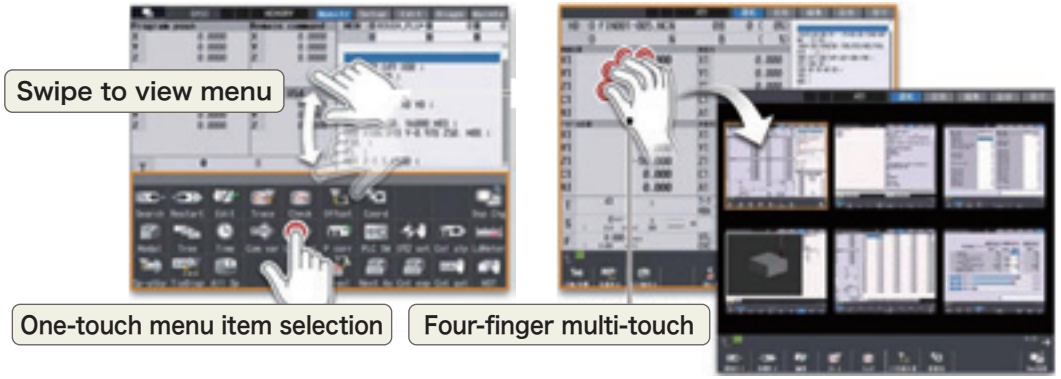

Turret interference

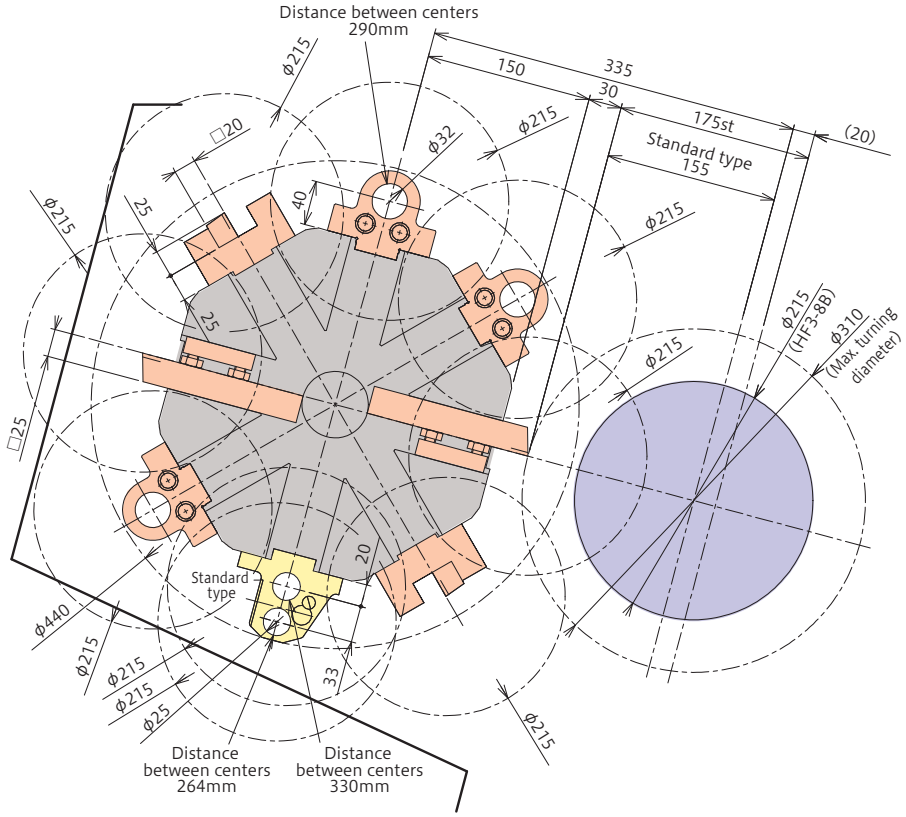

Without tailstock

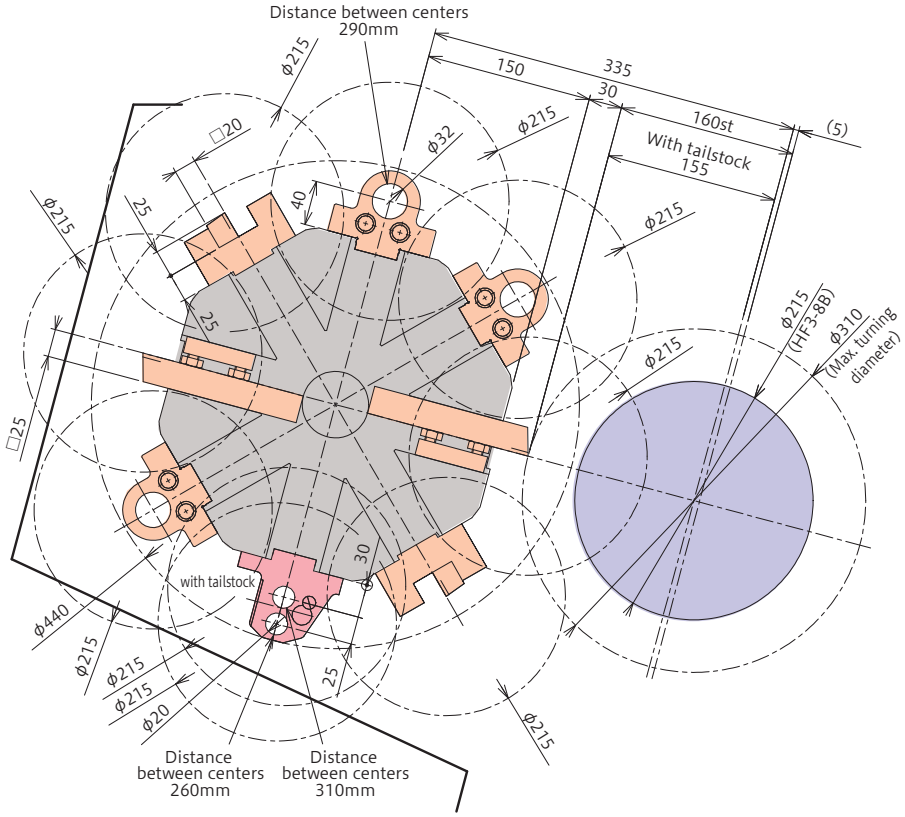

With tailstock

Unit (mm)

Stroke-Related Drawing

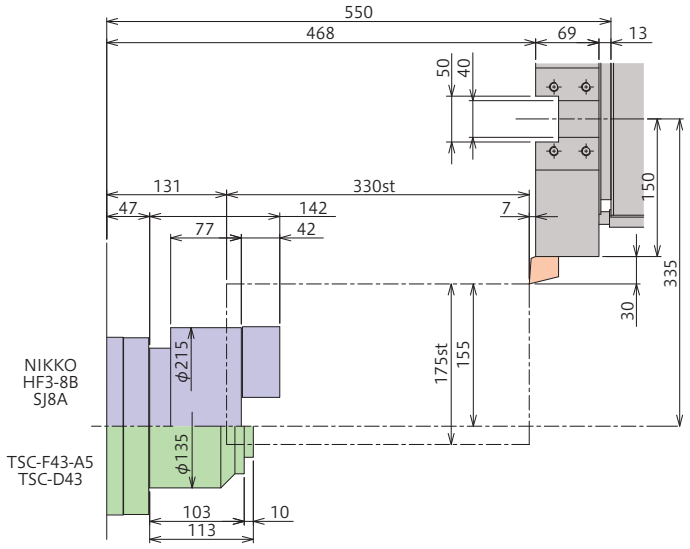

Without tailstock

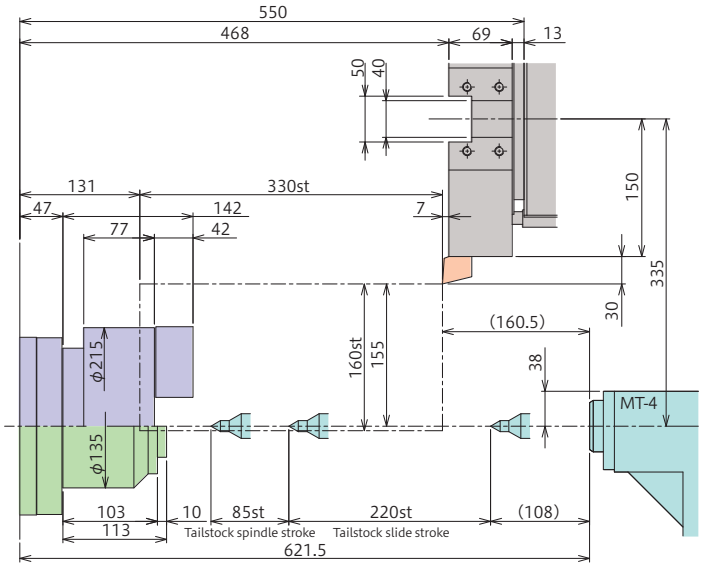

With tailstock

Unit (mm)

Spindle power characteristic curve

■ Max.4,500min^{-1}
Standard type
(ϕ100Spindle AC11/7.5kW)

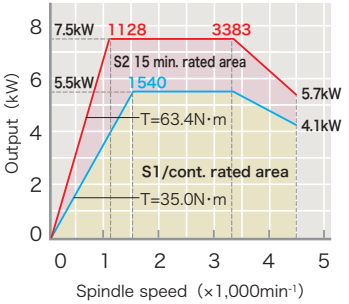

Tooling System

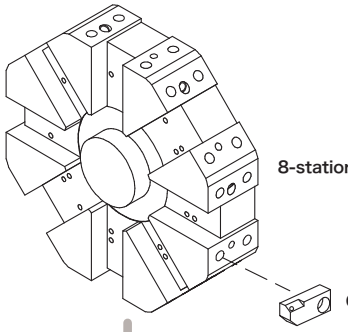

8-station turret

O.D.nozzle

With the tailstock specification

- Clamp block
  - OD/face/grooving tool □25
- Turning holder
  - OD/face/grooving tool □20
- ϕ32 Boring holder
  - Round hole bush(ϕ32/ϕ25) ϕ25 ϕ20 ϕ16 ϕ12 ϕ10 ϕ8 Blank
    - Boring tool
    - Straight shank drill
  - Drill holder Collet holder
    - Collet chuck
      - Center drill Straight drill Tap
- ϕ25 2-hole boring holder
- ϕ32 U drill holder
  - Round hole bush(ϕ32) ϕ25 ϕ20 ϕ16 ϕ12 ϕ10 ϕ8 Blank
    - U drill
- ϕ20 2-hole boring holder
  - Round hole bush(ϕ20) ϕ16 ϕ12 ϕ10 ϕ8 ϕ6 Blank
    - Boring tool
    - Straight shank drill
  - Drill holder Collet holder
    - Collet chuck
      - Center drill Straight drill Tap

You can mount a chuck (collet, 6-inch, 8-inch), without changing the chucking cylinder or sleeve.

Collet chuck

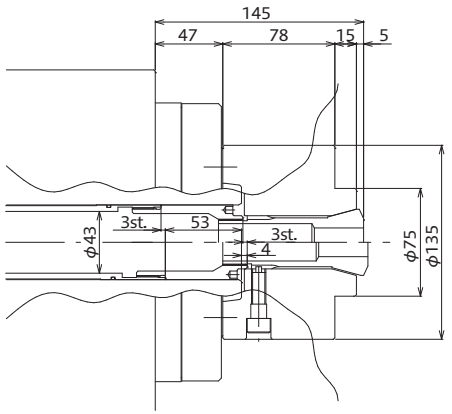

Collet chuck mounting drawing:TSC-F26-A5(2A-850 flange)

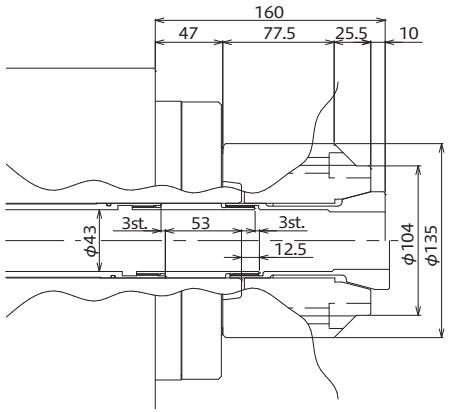

Collet chuck mounting drawing:TSC-F43-A5(2A flange)

Power chuck 6inch

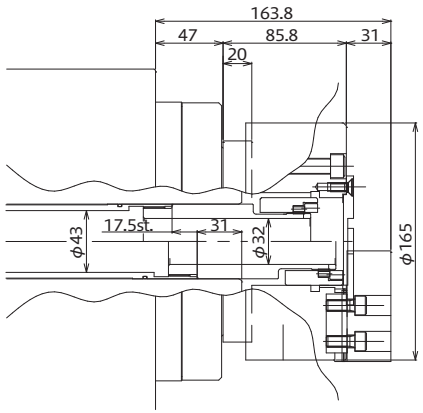

Power chuck mounting drawing:HF3-6A(NIKKO)、SJ6A(NIKKO)

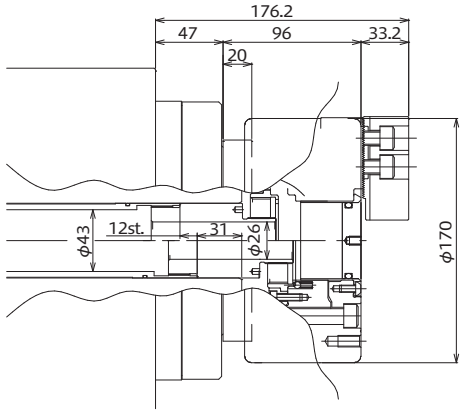

Power chuck mounting drawing:BR06(Kitagawa)

Power chuck 8inch

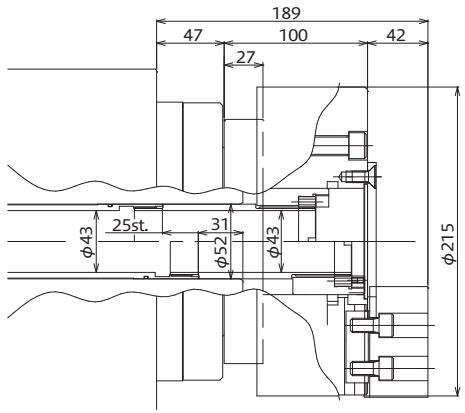

Power chuck mounting drawing:HF3-8B(NIKKO)、SJ8A(NIKKO)

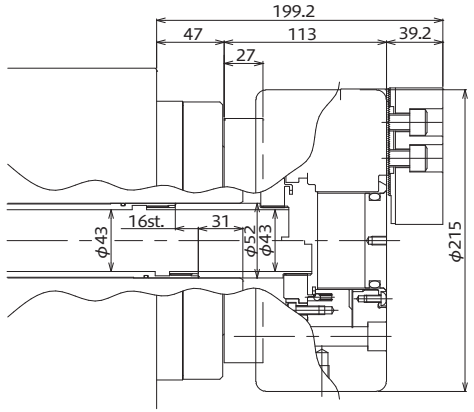

Power chuck mounting drawing:BR08(Kitagawa)

Unit (mm)

Item Cards for Increased Production Efficiency

T Chip conveyor



★ ★ ★ ★ ★

PRODUCTIVITY

SAFETY LEVEL

COST

T Front air blower



★ ★ ★ ★ ★

PRODUCTIVITY

SAFETY LEVEL

COST

T Auto door



★ ★ ★ ★ ★

PRODUCTIVITY

SAFETY LEVEL

COST

T Tailstock slide simple movement *With tailstock



★ ★ ★ ★ ★

PRODUCTIVITY

SAFETY LEVEL

COST

Machine Specifications

Item		Unit	AT-1	
			Without tailstock	With tailstock
Capacity	Max. turning diameter	mm	ϕ310	
	Max. turning length	mm	300※1	
	Max. bar diameter	mm	ϕ42	
Spindle	Chuck size	inch	—(Collet,6,8)※2	
	Spindle nose	JIS	A_2-5	
	Spindle bearing I.D.	mm	ϕ85	
	Through-hole on spindle	mm	ϕ52	
	Spindle speed	min^{-1}	4,500	
Tool post	Type		8-station turret	
	Tool shank	mm	□25	
	Boring holder I.D.	mm	ϕ32	
	Max. stroke	mm	X:175 Z:330	X:160 Z:330
	Rapid traverse rate	m/min	X:24 Z:24	
Motors	Spindle motor	kW	AC 7.5/5.5	
	Feed motor	kW	X:AC1.2 Z:AC2.2	
	Coolant motor	kW	AC 0.4	
	Hydraulic motor	kW	AC 0.75	
Tailstock	Front taper		—	MT-4
	Quill O.D.	mm	—	ϕ56
	Quill stroke	mm	—	85
	Tailstock stroke	mm	—	220
	Max. thrust	kN	—	3.5
Size	L×W×H	mm	1,810×1,690×1,500	1,945×1,690×1,500
	Machine weight	kg	2,200	2,400
	Spindle center height	mm	960	
Total electric capacity		KVA	17	

※1 When a TAKAMAZ collet chuck is mounted (TSC-F43-A5, TSC-D43 type)
※2 Chucks are not mounted. Available with parts orders.

Standard Accessories

- □Boring holder(2 sets)
- □Clamp block(8 sets)
- □Coolant block(8 sets)
- □Stroke adjust cylinder
- □Chuck clamp detector
- □Hydraulic unit
- □Thread cutting unit
- □Coolant unit (110L)
- □Work light
- □Cycle end signal light (1-tier)
- □TAKAMAZ Instruction manual

Optional Accessories (Machine Specifications)

- □Tool holders
- □Collet chucks
- □Various power chucks (6-/8-inch,hollow)
- □Rear chip conveyor (Spiral type)
- □Front air blower
- □Tailstock slide simple movement unit
- □Automatic door system

Controller Specifications

Item	TAKAMAZ & MITSUBISHI
Controlled axes	2 axes(X, Z)
Simultaneously controllable axes	Simultaneous 2 axes
Least input increment	0.001mm(X in diameter)
Least command increment	X:0.0005mm Z:0.001mm
Auxiliary function	M-code 3 digit
Spindle function	S-code 4 digit
Tool function	T-code 4 digit
Tape code	EIA(RS232C)/ISO(840)automatic recognition
Cutting feedrate	1～7,000mm/min
Command system	Incremental／Absolute
Linear interpolation	G01
Circular interpolation	G02, G03
Cutting feedrate override	0～150%
Rapid traverse override	F0, 100%
Program file name	32 characters
Backlash compensation	0～999999.9μm
Part program storage length	500Kbyte(1,280m)
Tool offsets	64 sets
Registered programs	1000 pcs
Tool geometry／Wear offset	Standard
Background editing	Standard
Direct drawing dimension programming	Standard
Nose R compensation	G40, G41, G42
Inch／Metric conversion	G20/G21
Programmable data input	G10
Multiple repetitive cycle	G70～G76
Multiple repetitive cycle Ⅱ	Pocket-shaped
Canned drilling cycle	Standard
Chamfering／Corner R	Standard
Custom macro	Standard

Item	TAKAMAZ & MITSUBISHI
Multiple M codes in one block	Max. 1
Constant surface speed control	G96, G97
Thread cutting retract	G32
Variable lead thread cutting	G34
Thread cutting retract	Standard
Clock function	Standard
Help function	Standard
Alarm history display	512 pcs
Self-diagnosis function	Standard
Sub-program call	up to 8 loops
Decimal point input	Standard
2nd reference point return	G30
Stored stroke check	Standard
Work coordinate system setting	G50、G54～G59
Input／Output interface	SD card, Flash Memory, Ethernet
Alarm message	Standard
Graphic trace	Standard
Graphic check	Standard
T-ECO Support	Idle stop function, Power consumption monitor screen
TAKAMAZ maintenance function	MAINTENANCE MENU Screen
Set of Instruction Manuals for Control Device	CD-ROM

Optional Accessories(Controller Specifications)

Item	
Multiple M codes in one block	Max. 3
Spindle orientation	6 set
TAKAMAZ option functions Lite	Work Counter,Tool Counter, Fixed wear (64 sets)

Floor Space Drawing

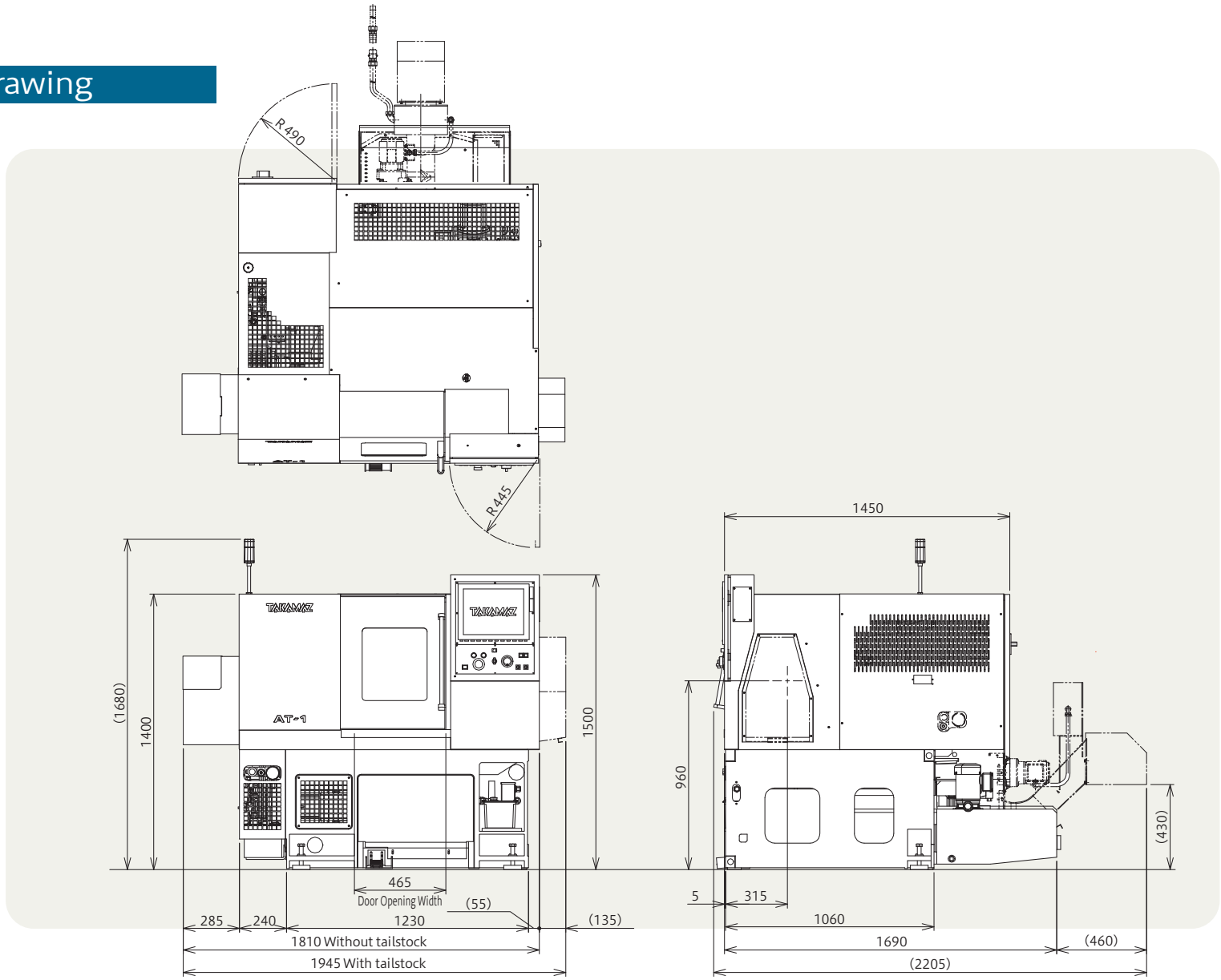

Unit (mm)

Head Office and Plant

■TAKAMATSU MACHINERY CO., LTD.

・HEAD OFFICE & PLANT

1-8 ASAHIGAOKA HAKUSAN-CITY ISHIKAWA JAPAN. 924-8558

TEL +81-(0)76-207-6155　FAX +81-(0)76-274-1418

・ASAHI PLANT

4-13 ASAHIGAOKA HAKUSAN-CITY ISHIKAWA JAPAN. 924-0004

TEL +81-(0)76-274-0123　FAX +81-(0)76-274-8530

Overseas Bases

■TAKAMATSU MACHINERY U.S.A., INC.

・CHICAGO HEAD OFFICE

1280 LANDMEIER ROAD ELK GROVE VILLAGE, IL 60007 USA

TEL +1-(0)847-981-8577　FAX +1-(0)847-981-8599

■TAKAMAZ MACHINERY EUROPE GmbH

IM HÜLSENFELD 19, 40721 HILDEN, GERMANY

TEL +49-(0)2103-789-4882　FAX +49-(0)2103-789-4883

■TAKAMAZ MACHINERY (HANGZHOU) CO., LTD.

・HANGZHOU HEAD OFFICE

NO.6800, JIANGDONG 3RD ROAD, JIANGDONG INDUSTRIAL PARK,
XIAOSHAN, HANGZHOU, ZHEJIANG, CHINA

TEL +86-(0)571-8287-9709　FAX +86-(0)571-8215-3732

■TAKAMATSU MACHINERY (THAILAND) CO., LTD.

・BANGKOK HEAD OFFICE

888/59 MOO 9, TAMBOL BANGPLA, AMPHUR BANGPLEE,
SAMUTPRAKARN PROVINCE, THAILAND

TEL +66-(0)2-136-7831　FAX +66-(0)2-136-7834

■PT. TAKAMAZ INDONESIA

JL. FESTIVAL BOULEVARD BLOK AA 11 NO.30,31 GRAND WISATA TAMBUN, BEKASI 17510

TEL +62-(0)21-8261-6431　FAX +62-(0)21-8261-6430

■TAKAMAZ MACHINERY MEXICO, S.A.DE C.V.

AVENIDA DE LOS INDUSTRIALES 522, LOCAL 4, INDUSTRIAL JULIAN DE OBREGON,
37290 LEON, GUANAJUATO MEXICO

TEL +52-477-784-0468

■TAKAMATSU MACHINERY VIETNAM CO., LTD

76M HOANG QUOC VIET, TAN MY WARD, HO CHI MINH CITY, VIETNAM

TEL +84-(0)28-3620-5671　FAX +84-(0)28-3620-5673

Affiliated Companies

■HANGZHOU FEELER TAKAMATSU MACHINERY CO., LTD.

NO.6800, JIANGDONG 3RD ROAD, JIANGDONG INDUSTRIAL PARK,
XIAOSHAN, HANGZHOU, ZHEJIANG, CHINA

TEL +86-(0)571-8215-3760　FAX +86-(0)571-8286-5311

TAKAMAZ

https://www.takamaz.co.jp

Scan this QR Code for more details.

MIX
Paper | Supporting responsible forestry
FSC® C013678

26.06.2B(O)